PRODUKT-INFO HORIZONTAL SLIDE SWITCH

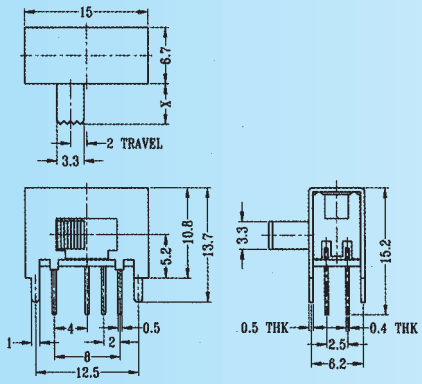

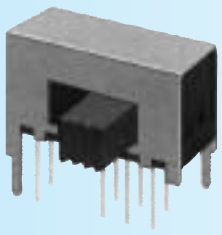

SK-23D03 (L 1 R 3)
SK-23J23 (L 3 R 1)

Rating: 0.3A 50V DC
Function: 2P3T

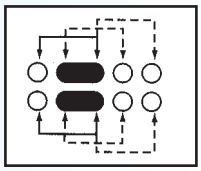

S SHORTING

Optional Knob type

CE					

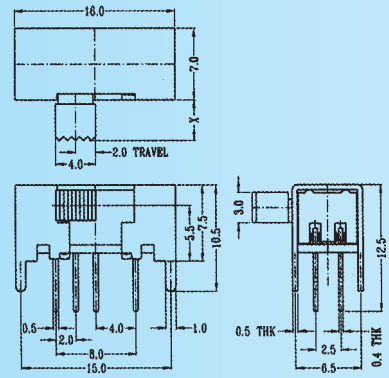

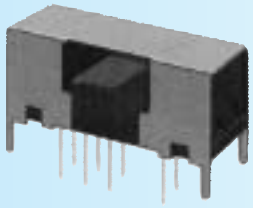

SK-23D05 (L 3 R 1)
SK-23D25 (L 1 R 3)

Rating: 0.3A 50V DC
Function: 2P3T

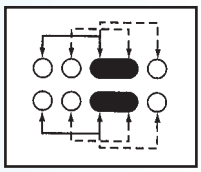

S SHORTING

Optional Knob type

CE					

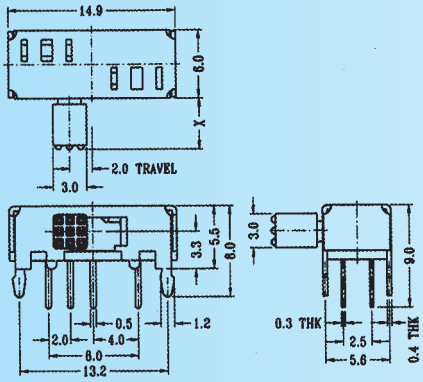

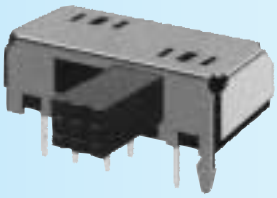

SK-23D06 (L 3 R 1)
SK-23D26 (L 1 R 3)

Rating: 0.3A 50V DC
Function: 2P3T

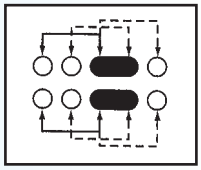

S SHORTING

Optional Knob type

GE	PG	VA			

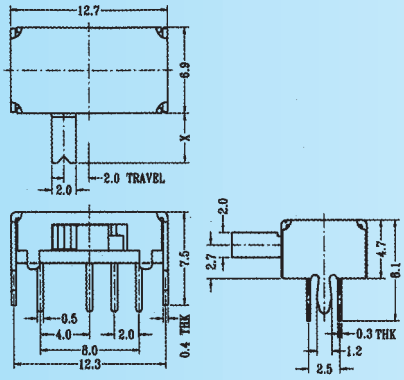

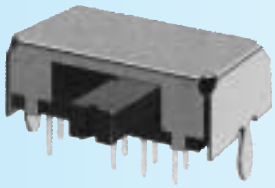

SK-23D07 (L 1 R 3)
SK-23D27 (L 3 R 1)

Rating: 0.3A 50V DC
Function: 2P3T

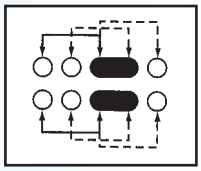

S SHORTING

Optional Knob type

VA	GE	PG			

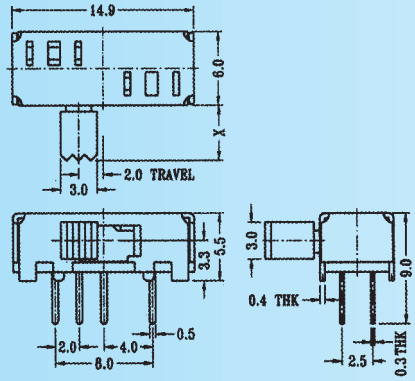

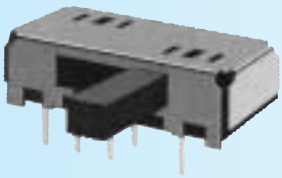

SK-23D08 (L 3 R 1)

Rating: 0.3A 50V DC
Function: 2P3T

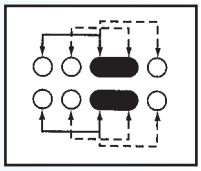

S SHORTING

Optional Knob type

GE	PG	VA			